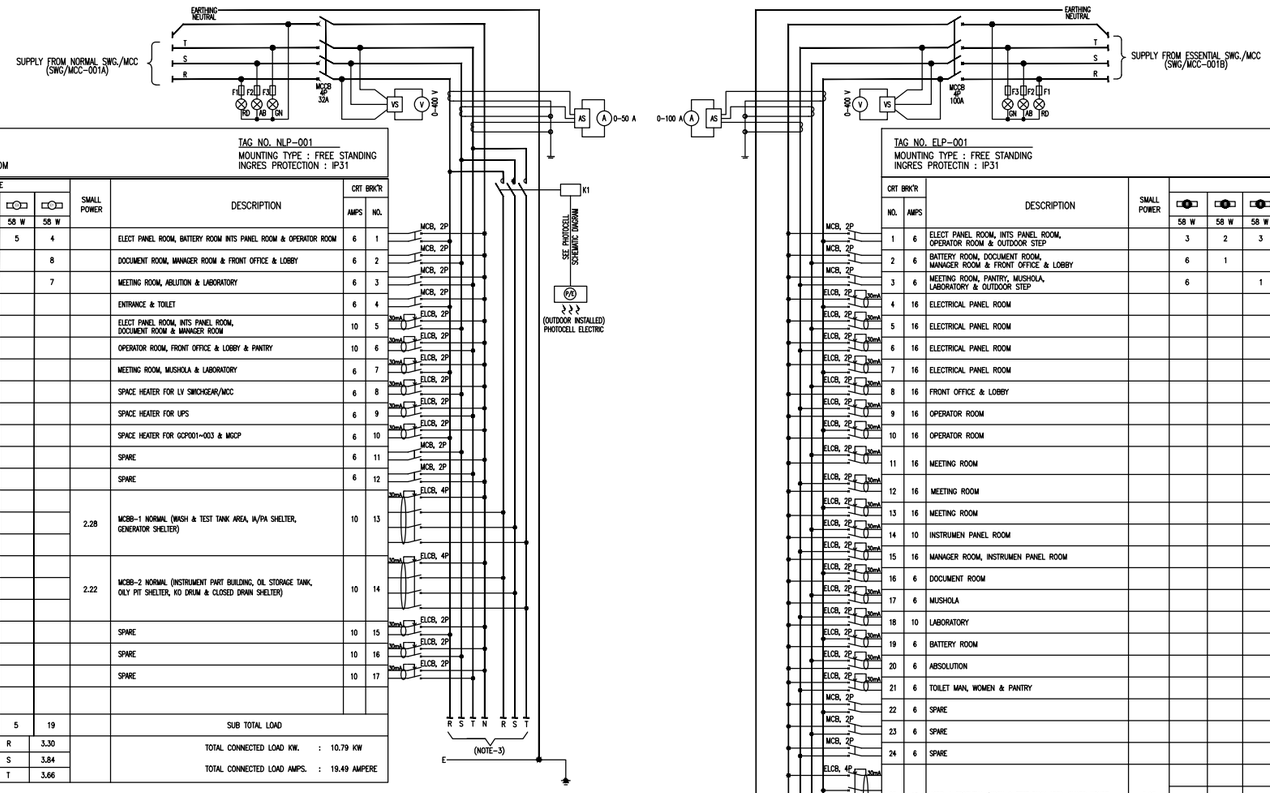

PANEL : NORMAL LIGHTING PANEL
400/230 VAC, 3Ph, 4W+E
LOCATION : ELECTRICAL PANEL ROOM

TAG NO. NLP-001
MOUNTING TYPE : FREE STANDING
INGRES PROTECTION : IP31

LOAD (kW) R	LOAD (kW) S	LOAD (kW) T	FIXTURES TYPE 200 W	FIXTURES TYPE 18 W	FIXTURES TYPE 58 W	FIXTURES TYPE 58 W	SMALL POWER	DESCRIPTION	CRT BRK'R AMPS	CRT BRK'R NO.
0.52					5	4		ELECT PANEL ROOM, BATTERY ROOM INTS PANEL ROOM & OPERATOR ROOM	6	1
	0.46					8		DOCUMENT ROOM, MANAGER ROOM & FRONT OFFICE & LOBBY	6	2
		0.41				7		MEETING ROOM, ABLUTION & LABORATORY	6	3
0.20				11				ENTRANCE & TOILET	6	4
	1.20		6					ELECT PANEL ROOM, INTS PANEL ROOM, DOCUMENT ROOM & MANAGER ROOM	10	5
		1.20	6					OPERATOR ROOM, FRONT OFFICE & LOBBY & PANTRY	10	6
0.80			4					MEETING ROOM, MUSHOLA & LABORATORY	6	7
	0.70							SPACE HEATER FOR LV SWICHGEAR/MCC	6	8
		0.40						SPACE HEATER FOR UPS	6	9
0.40								SPACE HEATER FOR GCP001-003 & MGCP	6	10
	–							SPARE	6	11
		–						SPARE	6	12
0.69										
	0.69						2.28	MCBB-1 NORMAL (WASH & TEST TANK AREA, W/PA SHELTER, GENERATOR SHELTER)	10	13
		0.90								
0.69										
	0.79						2.22	MCBB-2 NORMAL (INSTRUMENT PART BUILDING, OIL STORAGE TANK, OILY PIT SHELTER, KO DRUM & CLOSED DRAIN SHELTER)	10	14
		0.75								
–								SPARE	10	15
	–							SPARE	10	16
		–						SPARE	10	17
3.30	3.84	3.66	16	11	5	19		SUB TOTAL LOAD		

TOTAL KW/PHASE	
R	3.30
S	3.84
T	3.66

TOTAL CONNECTED LOAD KW. : 10.79 KW
TOTAL CONNECTED LOAD AMPS. : 19.49 AMPERE

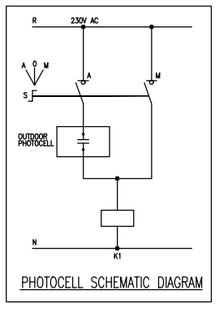

PHOTOCELL SCHEMATIC DIAGRAM

TAG NO. ELP-001
MOUNTING TYPE : FREE STANDING
INGRES PROTECTIN : IP31

PANEL : ESSENTIAL LIGHTING PANEL
400/230 VAC, 3Ph, 4W+E
LOCATION : ELECTRICAL PANEL ROOM

CRT BRK'R NO.	CRT BRK'R AMPS	DESCRIPTION	SMALL POWER	FIXTURES TYPE 58 W	FIXTURES TYPE 58 W	FIXTURES TYPE 58 W	FIXTURES TYPE EXIT 7 W	EF 100 W	EF 20 W	AC 1.5 PK 1730 W	AC 1.0 PK 1200 W	AC 0.75 PK 700 W	AC 0.5 PK 450 W	LOAD (kW) R	LOAD (kW) S	LOAD (kW) T
1	6	ELECT PANEL ROOM, INTS PANEL ROOM, OPERATOR ROOM & OUTDOOR STEP		3	2	3	1							0.47		
2	6	BATTERY ROOM, DOCUMENT ROOM, MANAGER ROOM & FRONT OFFICE & LOBBY		6	1		1								0.41	
3	6	MEETING ROOM, PANTRY, MUSHOLA, LABORATORY & OUTDOOR STEP		6		1	1									0.41
4	16	ELECTRICAL PANEL ROOM								1				1.73		
5	16	ELECTRICAL PANEL ROOM								1					1.73	
6	16	ELECTRICAL PANEL ROOM								1						1.73
7	16	ELECTRICAL PANEL ROOM								1				1.73		
8	16	FRONT OFFICE & LOBBY								1					1.73	
9	16	OPERATOR ROOM								1						1.73
10	16	OPERATOR ROOM								1				1.73		
11	16	MEETING ROOM								1					1.73	
12	16	MEETING ROOM								1						1.73
13	16	MEETING ROOM								1				1.73		
14	10	INSTRUMEN PANEL ROOM									1				1.20	
15	16	MANAGER ROOM, INSTRUMEN PANEL ROOM									1		1			1.65
16	6	DOCUMENT ROOM											1	0.45		
17	6	MUSHOLA										1			0.70	
18	10	LABORATORY								1						1.73
19	6	BATTERY ROOM						1						0.10		
20	6	ABSOLUTION							1						0.02	
21	6	TOILET MAN, WOMEN & PANTRY							3							0.06
22	6	SPARE												–		
23	6	SPARE													–	
24	6	SPARE														–
25	10	MCBB-1 ESSENTIAL (WASH & TEST TANK AREA, GUARD HOUSE, TEST PUMP SHELTER)	3.07											1.00		
															1.02	
																1.06
26	16	MCBB-2 ESSENTIAL (OIL STORAGE TANK, INST. PART BLDG., OILY PIT SHELTER, KO DRUM SHELTER, CTP SHELTER)	5.20											1.55		
															1.58	
																1.52
27	10	MCBB-3 ESSENTIAL (FRONT OFFICE, CLINIC & SCRTY BLDG., FIRE WATER PUMP SHELTER)	3.52											1.13		
															1.26	
																1.13
28	10	MCBB-4 ESSENTIAL (STREET LIGHTING)	2.20											0.80		
															0.70	
																0.70
29	6	SPARE												–		
30	6	SPARE													–	
31	6	SPARE														–
		SUB TOTAL LOAD		15	3	4	3	1	4	11	2	1	2	12.41	12.08	13.45

TOTAL CONNECTED LOAD KW. : 36.74 KW
TOTAL CONNECTED LOAD AMPS. : 66.36 A

TOTAL KW/PHASE	
R	12.61
S	12.28
T	11.85

SYMBOL	DESCRIPTION
C1	FLUORESCENT LIGHT CEILING RECESSED MOUNTING 230V, 1Ph, 3W(P,N,E), 50Hz, 1x58WATT LIGHT EMITTING DIODE (LED) INDOOR USED, NON HAZARDOUS AREA
BC	FLUORESCENT LIGHT CEILING RECESSED MOUNTING 230V, 1Ph, 3W(P,N,E), 50Hz, 1x58WATT LIGHT EMITTING DIODE (LED) INDOOR USED, NON HAZARDOUS AREA C/W BATTERY Ni-Cd WITH 90 MINUTES BACK UP
C3	FLUORESCENT LIGHT CEILING SUSPENDED MOUNTING 230V, 1Ph, 3W(P,N,E), 50Hz, 1x58WATT LIGHT EMITTING DIODE (LED) INDOOR USED, NON HAZARDOUS AREA
BC	FLUORESCENT LIGHT CEILING SUSPENDED MOUNTING 230V, 1Ph, 3W(P,N,E), 50Hz, 1x58WATT LIGHT EMITTING DIODE (LED) INDOOR USED, NON HAZARDOUS AREA C/W BATTERY Ni-Cd WITH 90 MINUTES BACK UP
BC	FLUORESCENT LIGHT CEILING SUSPENDED MOUNTING 230V, 1Ph, 3W(P,N,E), 50Hz, 1x58WATT LIGHT EMITTING DIODE (LED) WITH COVER, OUTDOOR USED, NON HAZARDOUS AREA C/W BATTERY Ni-Cd WITH 90 MINUTES BACK UP
EXIT	FLUORESCENT EXIT LIGHT SURFACE MOUNTING 230V, 1Ph, 3W(P,N,E), 50Hz, 1x7WATT LIGHT EMITTING DIODE (LED) SINGLE FACE, INDOOR USED, NON HAZARDOUS AREA, C/W BATTERY Ni-Cd WITH 90 MINUTES BACK UP
	DOWN LIGHT 18W LIGHT EMITTING DIODE (LED). 230V, 50 Hz.
	RECEPTACLE, NORMAL SOURCE GENERAL PURPOSE, 230V, 1PH, 2P, 16A, 50Hz
EF	RECEPTACLE, NORMAL SOURCE (FOR EXHAUST FAN) GENERAL PURPOSE, 230V, 1PH, 2P, 16A, 50Hz
AC	RECEPTACLE, NORMAL SOURCE (FOR AC) GENERAL PURPOSE, 230V, 1PH, 2P, 16A, 50Hz
	MOLDED CASE CIRCUIT BREAKER/MINIATURE CIRCUIT BREAKER
	CONTACTOR
	POWER FUSE
	SIGNAL/INDICATOR LAMP
	CONNECTION POINT

NOTES :

DRAWING REFERENCE	DESCRIPTION	REV	DATE	DESCRIPTION	PREPR'D	CHECK'D	APRV'D	CHECKED	APPROVED
TMBP – 01 – EL – DST – 107	DATA SHEET FOR LIGHTING AND SMALL POWER								
TMBP – 01 – EL – DBS – 101	CALCULATION – HVAC								
TMBP – 01 – EL – DBS – 101	ELECTRICAL DESIGN CRITERIA								
TMBP – 01 – EL – CAL – 104	LIGHTING CALCULATION								
TMBP – 01 – EL – LAY – 109	LIGHTING LAYOUT SHEET 1								
TMBP – 01 – EL – LAY – 110	LIGHTING LAYOUT SHEET 2								
TMBP – 01 – EL – LAY – 111	LIGHTING LAYOUT SHEET 3								
TMBP – 01 – EL – LAY – 112	LIGHTING LAYOUT SHEET 4								
TMBP – 01 – EL – LAY – 113	LIGHTING LAYOUT SHEET 5	A	09-01-2026	ISSUED FOR RIVIEW	FN	AS	MR		

PT. PERTAMINA EP APPROVAL

PROCET :
JASA PEMBANGUNAN FASILITAS PRODUKSI STASIUN PENGUMPUL (SP) TANJUNG MIRING BARAT & KARANGAN TIMUR

OWNER : skkmigas PERTAMINA EP

CONTRACTOR : PCG

SCALE : NTS

DRAWING NO. TMBP – SP001 – EL – SCH – D102

SHEET. NO. 01 OF 01

REV A

DRAWING TITLE :
LIGHTING & SMALL POWER PANEL SCHEDULE SHEET 1

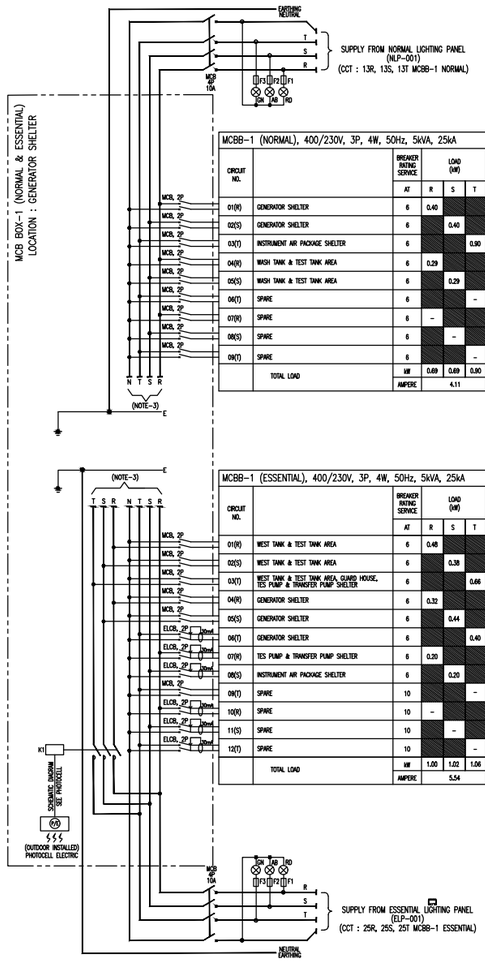

MCBB-1 (NORMAL), 400/230V, 3P, 4W, 50Hz, 5kVA, 25kA

CIRCUIT NO.		BREAKER RATING SERVICE	LOAD (kW)						
		AT	R	S	T	100 W	120 W	85 W	
01(R)	GENERATOR SHELTER	6	0.40			4			
02(S)	GENERATOR SHELTER	6		0.40		4			
03(T)	INSTRUMENT AIR PACKAGE SHELTER	6			0.90	9			
04(R)	WASH TANK & TEST TANK AREA	6	0.29				1	2	
05(S)	WASH TANK & TEST TANK AREA	6		0.29			1	2	
06(T)	SPARE	6			–				
07(R)	SPARE	6	–						
08(S)	SPARE	6		–					
09(T)	SPARE	6			–				
	TOTAL LOAD	kW	0.69	0.69	0.90	17	2	4	
		AMPERE	4.11						

MCBB-1 (ESSENTIAL), 400/230V, 3P, 4W, 50Hz, 5kVA, 25kA

CIRCUIT NO.		BREAKER RATING SERVICE	LOAD (kW)								
		AT	R	S	T	100 W	120 W	85 W	50 W	200 W	
01(R)	WEST TANK & TEST TANK AREA	6	0.48			1	1	3			
02(S)	WEST TANK & TEST TANK AREA	6		0.38			1	3			
03(T)	WEST TANK & TEST TANK AREA, GUARD HOUSE, TES PUMP & TRANSFER PUMP SHELTER	6			0.66		5		1		
04(R)	GENERATOR SHELTER	6	0.32			2	1				
05(S)	GENERATOR SHELTER	6		0.44		2	2				
06(T)	GENERATOR SHELTER	6			0.40					2	
07(R)	TES PUMP & TRANSFER PUMP SHELTER	6	0.20							1	
08(S)	INSTRUMENT AIR PACKAGE SHELTER	6		0.20						1	
09(T)	SPARE	10			–						
10(R)	SPARE	10	–								
11(S)	SPARE	10		–							
12(T)	SPARE	10			–						
	TOTAL LOAD	kW	1.00	1.02	1.06	5	10	6	1	4	
		AMPERE	5.54								

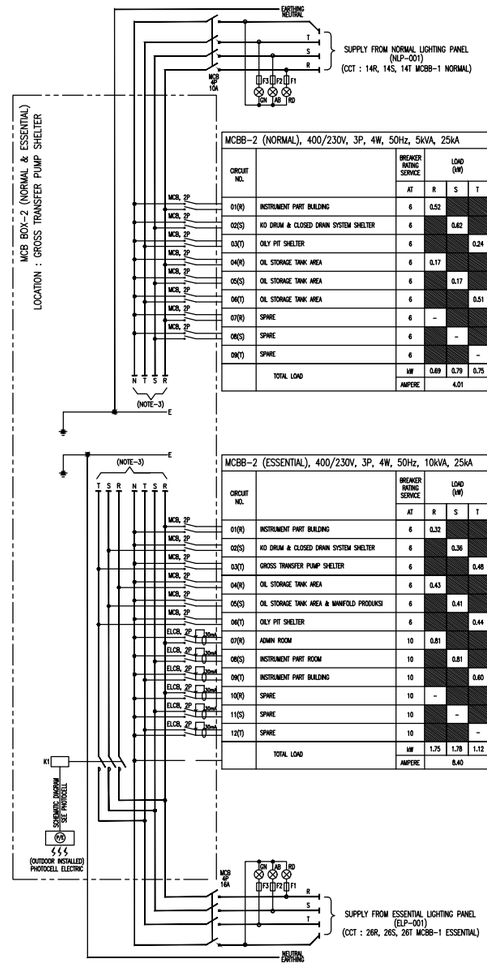

MCBB-2 (NORMAL), 400/230V, 3P, 4W, 50Hz, 5kVA, 25kA

CIRCUIT NO.		BREAKER RATING SERVICE	LOAD (kW)						
		AT	R	S	T	50 W	120 W	100 W	85 W
01(R)	INSTRUMENT PART BUILDING	6	0.52			2		4	
02(S)	KO DRUM & CLOSED DRAIN SYSTEM SHELTER	6		0.62			3		3
03(T)	OILY PIT SHELTER	6			0.24		2		
04(R)	OIL STORAGE TANK AREA	6	0.17						2
05(S)	OIL STORAGE TANK AREA	6		0.17					2
06(T)	OIL STORAGE TANK AREA	6			0.51				6
07(R)	SPARE	6	–						
08(S)	SPARE	6		–					
09(T)	SPARE	6			–				
	TOTAL LOAD	kW	0.69	0.79	0.75	2	5	4	13
		AMPERE	4.01						

MCBB-2 (ESSENTIAL), 400/230V, 3P, 4W, 50Hz, 10kVA, 25kA

CIRCUIT NO.		BREAKER RATING SERVICE	LOAD (kW)								
		AT	R	S	T	50 W	120 W	100 W	85 W	200 W	810 W
01(R)	INSTRUMENT PART BUILDING	6	0.32			2		2			
02(S)	KO DRUM & CLOSED DRAIN SYSTEM SHELTER	6		0.36			3				
03(T)	GROSS TRANSFER PUMP SHELTER	6			0.48		4				
04(R)	OIL STORAGE TANK AREA	6	0.43						5		
05(S)	OIL STORAGE TANK AREA & MANIFOLD PRODUCSI	6		0.41			2		2		
06(T)	OILY PIT SHELTER	6			0.44		2			1	
07(R)	ADMIN ROOM	10	0.81								1
08(S)	INSTRUMENT PART ROOM	10		0.81							1
09(T)	INSTRUMENT PART BUILDING	10			0.60					3	
10(R)	SPARE	10	–								
11(S)	SPARE	10		–							
12(T)	SPARE	10			–						
	TOTAL LOAD	kW	1.75	1.78	1.12	2	11	2	7	4	2
		AMPERE	8.40								

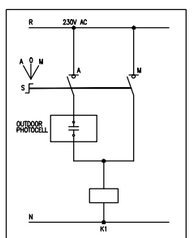

PHOTOCELL SCHEMATIC DIGRAM

SYMBOL	DESCRIPTION
C1	FLUORESCENT LIGHT CEILING RECESSED MOUNTING 230V, 1Ph, 3W(P,N,E), 50Hz, 1x58WATT LIGHT EMITTING DIODE (LED) INDOOR USED, NON HAZARDOUS AREA
RE	FLUORESCENT LIGHT CEILING RECESSED MOUNTING 230V, 1Ph, 3W(P,N,E), 50Hz, 1x58WATT LIGHT EMITTING DIODE (LED) INDOOR USED, NON HAZARDOUS AREA C/W BATTERY Ni-Cd WITH 90 MINUTES BACK UP
C3	FLUORESCENT LIGHT CEILING SUSPENDED MOUNTING 230V, 1Ph, 3W(P,N,E), 50Hz, 1x58WATT LIGHT EMITTING DIODE (LED) INDOOR USED, NON HAZARDOUS AREA
SE	FLUORESCENT LIGHT CEILING SUSPENDED MOUNTING 230V, 1Ph, 3W(P,N,E), 50Hz, 1x58WATT LIGHT EMITTING DIODE (LED) INDOOR USED, NON HAZARDOUS AREA C/W BATTERY Ni-Cd WITH 90 MINUTES BACK UP
RE	FLUORESCENT LIGHT CEILING SUSPENDED MOUNTING 230V, 1Ph, 3W(P,N,E), 50Hz, 1x58WATT LIGHT EMITTING DIODE (LED) WITH COVER, OUTDOOR USED, NON HAZARDOUS AREA C/W BATTERY Ni-Cd WITH 90 MINUTES BACK UP
EXIT	FLUORESCENT EXIT LIGHT SURFACE MOUNTING 230V, 1Ph, 3W(P,N,E), 50Hz, 1x7WATT LIGHT EMITTING DIODE (LED) SINGLE FACE, INDOOR USED, NON HAZARDOUS AREA, C/W BATTERY Ni-Cd WITH 90 MINUTES BACK UP
	DOWN LIGHT 18W LIGHT EMITTING DIODE (LED). 230V, 50 Hz.
	RECEPTACLE, NORMAL SOURCE GENERAL PURPOSE, 230V, 1PH, 2P, 16A, 50Hz
EF	RECEPTACLE, NORMAL SOURCE (FOR EXHAUST FAN) GENERAL PURPOSE, 230V, 1PH, 2P, 16A, 50Hz
AC	RECEPTACLE, NORMAL SOURCE (FOR AC) GENERAL PURPOSE, 230V, 1PH, 2P, 16A, 50Hz
	MOLDED CASE CIRCUIT BREAKER/MINIATURE CIRCUIT BREAKER
	CONTACTOR
	POWER FUSE
	SIGNAL/INDICATOR LAMP
	CONNECTION POINT

NOTES :

DRAWING REFERENCE	DESCRIPTION	REV	DATE	DESCRIPTION	PREPR'D	CHECK'D	APRV'D
TMBP – 01 – EL – DST – 107	DATA SHEET FOR LIGHTING AND SMALL POWER						
TMBP – 01 – EL – DBS – 101	CALCULATION – HVAC						
TMBP – 01 – EL – DBS – 101	ELECTRICAL DESIGN CRITERIA						
TMBP – 01 – EL – CAL – 104	LIGHTING CALCULATION						
TMBP – 01 – EL – LAY – 109	LIGHTING LAYOUT SHEET 1						
TMBP – 01 – EL – LAY – 110	LIGHTING LAYOUT SHEET 2						
TMBP – 01 – EL – LAY – 111	LIGHTING LAYOUT SHEET 3						
TMBP – 01 – EL – LAY – 112	LIGHTING LAYOUT SHEET 4						
TMBP – 01 – EL – LAY – 113	LIGHTING LAYOUT SHEET 5	A	09–01–2026	ISSUED FOR RIVIEW	FN	AS	MR

PT. PERTAMINA EP APPROVAL

CHECKED | APPROVED

PROCET :
JASA PEMBANGUNAN FASILITAS PRODUKSI STASIUN PENGUMPUL (SP) TANJUNG MIRING BARAT & KARANGAN TIMUR

OWNER : skkmigas PERTAMINA EP

CONTRACTOR : POG

SCALE : NTS

DRAWING NO. TMBP – SP001 – EL – SCH – D102

SHEET. NO. 01 OF 02

REV A

DRAWING TITLE :
LIGHTING & SMALL POWER PANEL SCHEDULE SHEET 2

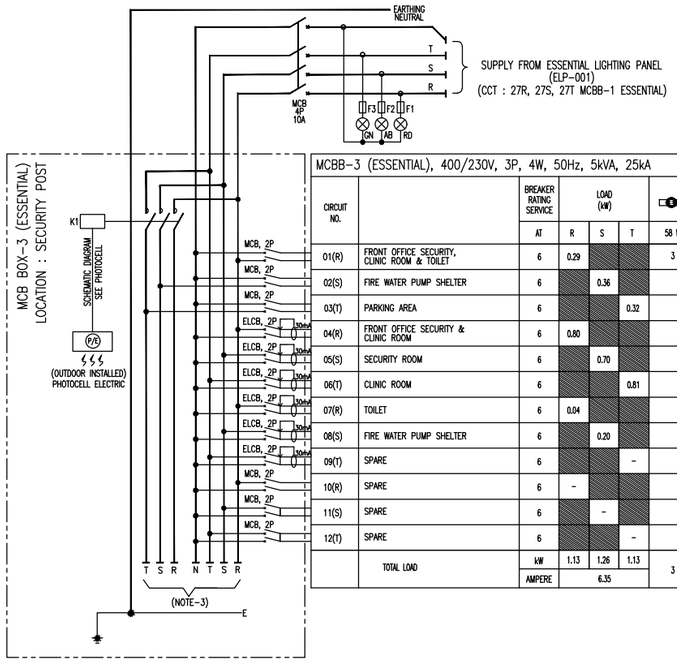

MCBB-3 (ESSENTIAL), 400/230V, 3P, 4W, 50Hz, 5kVA, 25kA

CIRCUIT NO.		BREAKER RATING SERVICE	LOAD (kW)											
		AT	R	S	T	58 W	58 W	18 W	100 W	120 W	200 W	20 W	810 W (1 PK)	700 W (3/4 PK)
01(R)	FRONT OFFICE SECURITY, CLINIC ROOM & TOILET	6	0.29			3	1	3						
02(S)	FIRE WATER PUMP SHELTER	6		0.36						3				
03(T)	PARKING AREA	6			0.32				2	1				
04(R)	FRONT OFFICE SECURITY & CLINIC ROOM	6	0.80								4			
05(S)	SECURITY ROOM	6		0.70										1
06(T)	CLINIC ROOM	6			0.81								1	
07(R)	TOILET	6	0.04									2		
08(S)	FIRE WATER PUMP SHELTER	6		0.20							1			
09(T)	SPARE	6			–									
10(R)	SPARE	6	–											
11(S)	SPARE	6		–										
12(T)	SPARE	6			–									
	TOTAL LOAD	kW	1.13	1.26	1.13	3	1	3	2	4	5	2	1	1
		AMPERE	6.35											

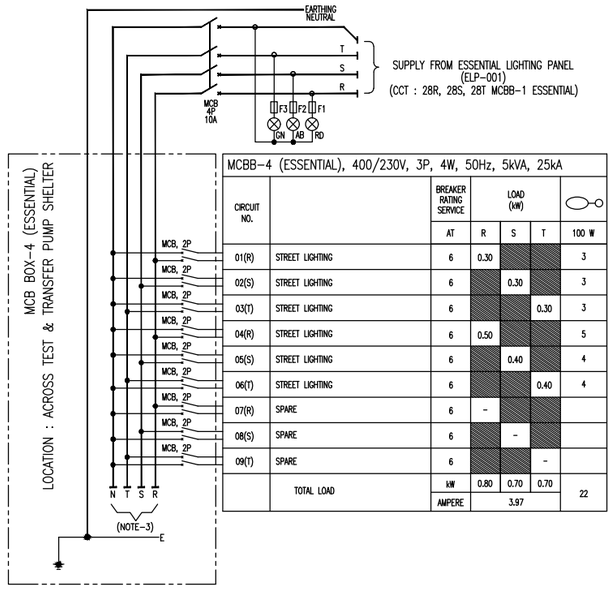

MCBB-4 (ESSENTIAL), 400/230V, 3P, 4W, 50Hz, 5kVA, 25kA

CIRCUIT NO.		BREAKER RATING SERVICE	LOAD (kW)			
		AT	R	S	T	100 W
01(R)	STREET LIGHTING	6	0.30			3
02(S)	STREET LIGHTING	6		0.30		3
03(T)	STREET LIGHTING	6			0.30	3
04(R)	STREET LIGHTING	6	0.50			5
05(S)	STREET LIGHTING	6		0.40		4
06(T)	STREET LIGHTING	6			0.40	4
07(R)	SPARE	6	–			
08(S)	SPARE	6		–		
09(T)	SPARE	6			–	
	TOTAL LOAD	kW	0.80	0.70	0.70	22
		AMPERE	3.97			

SYMBOL	DESCRIPTION
C1	FLUORESCENT LIGHT CEILING RECESSED MOUNTING 230V, 1Ph, 3W(P,N,E), 50Hz, 1x58WATT LIGHT EMITTING DIODE (LED) INDOOR USED, NON HAZARDOUS AREA
C2	FLUORESCENT LIGHT CEILING RECESSED MOUNTING 230V, 1Ph, 3W(P,N,E), 50Hz, 1x58WATT LIGHT EMITTING DIODE (LED) INDOOR USED, NON HAZARDOUS AREA C/W BATTERY Ni-Cd WITH 90 MINUTES BACK UP
C3	FLUORESCENT LIGHT CEILING SUSPENDED MOUNTING 230V, 1Ph, 3W(P,N,E), 50Hz, 1x58WATT LIGHT EMITTING DIODE (LED) INDOOR USED, NON HAZARDOUS AREA
C4	FLUORESCENT LIGHT CEILING SUSPENDED MOUNTING 230V, 1Ph, 3W(P,N,E), 50Hz, 1x58WATT LIGHT EMITTING DIODE (LED) INDOOR USED, NON HAZARDOUS AREA C/W BATTERY Ni-Cd WITH 90 MINUTES BACK UP
C5	FLUORESCENT LIGHT CEILING SUSPENDED MOUNTING 230V, 1Ph, 3W(P,N,E), 50Hz, 1x58WATT LIGHT EMITTING DIODE (LED) WITH COVER, OUTDOOR USED, NON HAZARDOUS AREA C/W BATTERY Ni-Cd WITH 90 MINUTES BACK UP
EXIT	FLUORESCENT EXIT LIGHT SURFACE MOUNTING 230V, 1Ph, 3W(P,N,E), 50Hz, 1x7WATT LIGHT EMITTING DIODE (LED) SINGLE FACE, INDOOR USED, NON HAZARDOUS AREA, C/W BATTERY Ni-Cd WITH 90 MINUTES BACK UP
⊗	DOWN LIGHT 18W LIGHT EMITTING DIODE (LED). 230V, 50 Hz.
⊖	RECEPTACLE, NORMAL SOURCE GENERAL PURPOSE, 230V, 1PH, 2P, 16A, 50Hz
⊖EF	RECEPTACLE, NORMAL SOURCE (FOR EXHAUST FAN) GENERAL PURPOSE, 230V, 1PH, 2P, 16A, 50Hz
⊖AC	RECEPTACLE, NORMAL SOURCE (FOR AC) GENERAL PURPOSE, 230V, 1PH, 2P, 16A, 50Hz
	MOLDED CASE CIRCUIT BREAKER/MINIATURE CIRCUIT BREAKER
	CONTACTOR
	POWER FUSE
⊗	SIGNAL/INDICATOR LAMP
●	CONNECTION POINT

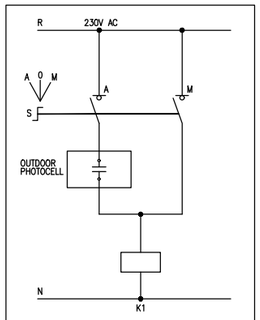

PHOTOCELL SCHEMATIC DIGRAM

NOTES :

DRAWING REFERENCE	DESCRIPTION
TMBP – 01 – EL – DST – 107	DATA SHEET FOR LIGHTING AND SMALL POWER
TMBP – 01 – EL – DBS – 101	CALCULATION – HVAC
TMBP – 01 – EL – DBS – 101	ELECTRICAL DESIGN CRITERIA
TMBP – 01 – EL – CAL – 104	LIGHTING CALCULATION
TMBP – 01 – EL – LAY – 109	LIGHTING LAYOUT SHEET 1
TMBP – 01 – EL – LAY – 110	LIGHTING LAYOUT SHEET 2
TMBP – 01 – EL – LAY – 111	LIGHTING LAYOUT SHEET 3
TMBP – 01 – EL – LAY – 112	LIGHTING LAYOUT SHEET 4
TMBP – 01 – EL – LAY – 113	LIGHTING LAYOUT SHEET 5

REV	DATE	DESCRIPTION	PREPR'D	CHECK'D	APRV'D	CHECKED	APPROVED
A	09-01-2026	ISSUED FOR RIVIEW	FN	AS	MR		

PT. PERTAMINA EP APPROVAL

PROCET :
JASA PEMBANGUNAN FASILITAS PRODUKSI STASIUN PENGUMPUL (SP) TANJUNG MIRING BARAT & KARANGAN TIMUR

OWNER : skkmigas PERTAMINA EP

CONTRACTOR : PCG

SCALE : NTS

DRAWING NO. TMBP – SP001 – EL – SCH – D102

SHEET. NO. 02 OF 02

REV A

DRAWING TITLE :
LIGHTING & SMALL POWER PANEL SCHEDULE SHEET 3